Common Laboratory Equipment

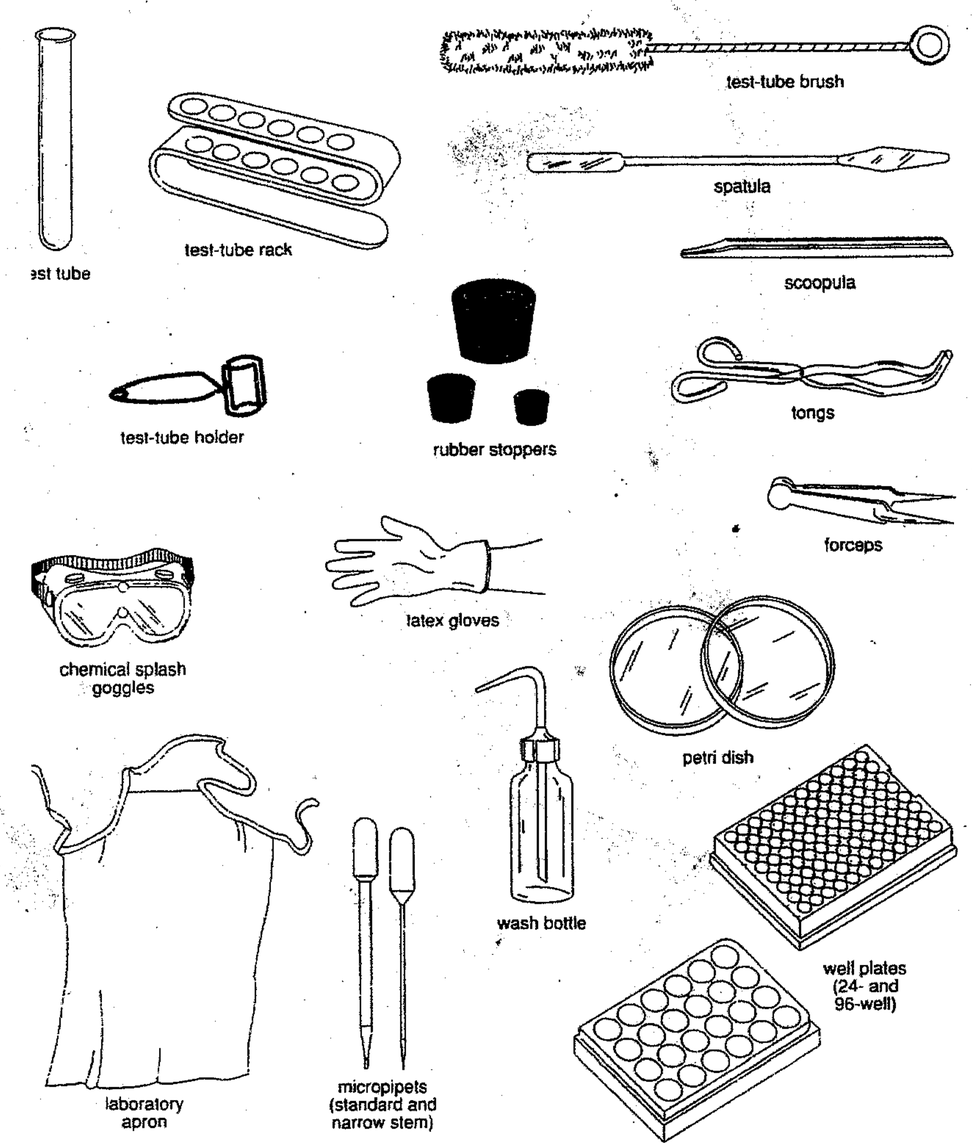

© Prentice-Hall, Inc.

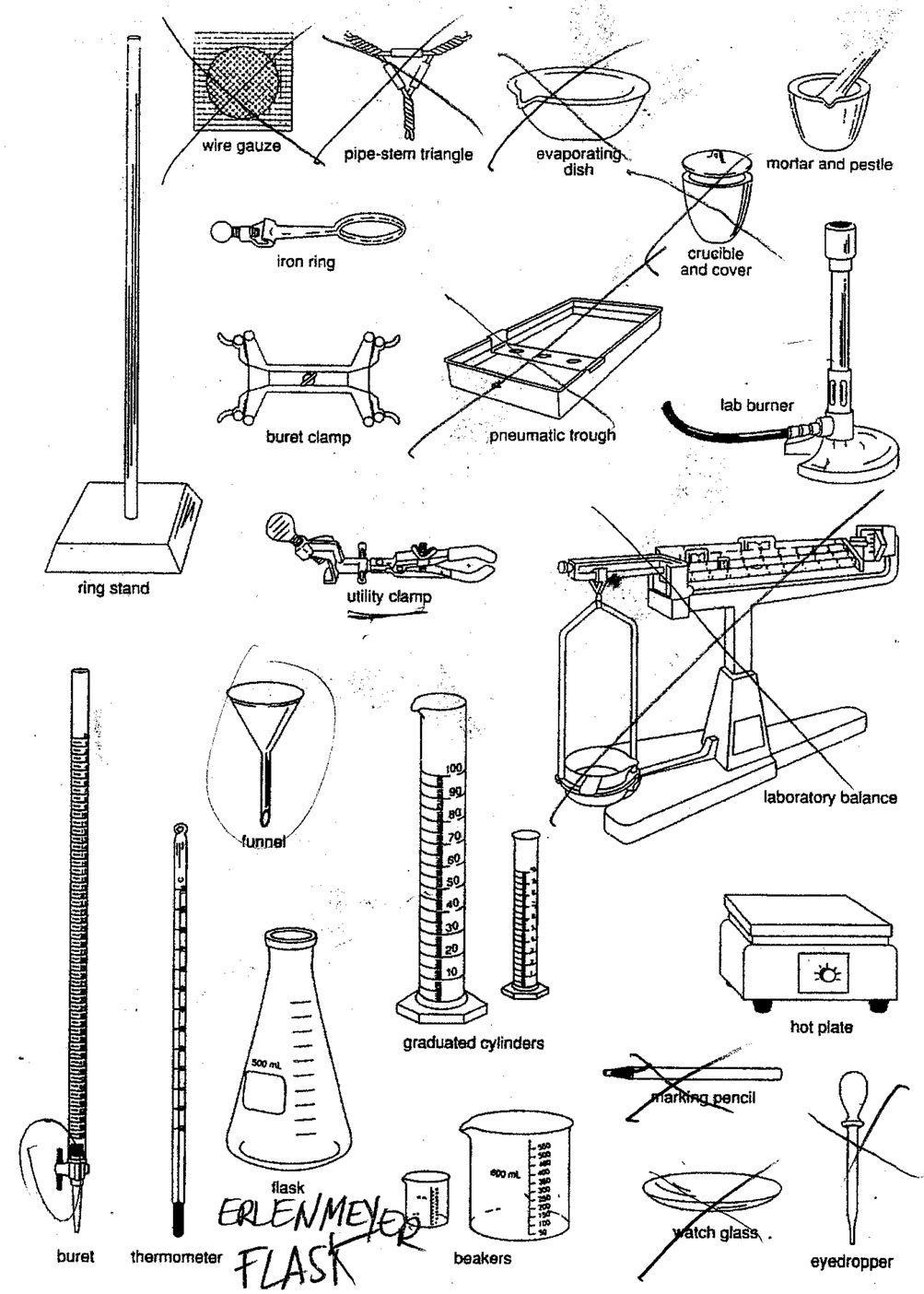

© Prentice-Hall, Inc.